CURBO

Concrete Solutions

Parking Curb Installation Design Guide

Call/Text: 443-MR-CURBO (443-672-8726)

CurboParkingCurbs.com

CURBO

Concrete Solutions

Covered Bridge Precast LLC

Home of CURBO Parking Curbs

Lancaster PA

Call or Text 443-MR-CURBO

Phone: 717.442.2872

Email: sales@curboparkingcurbs.com

www.CurboParkingCurbs.com

Curbo is a brand of products designed and manufactured by Covered Bridge Precast LLC

CURBO

Concrete Solutions

Started in 1985, CURBO Parking Curbs is an Amish family owned business based in Lancaster County, PA

A unique combination of traditional and modern lifestyles is common in the area surrounding the company, where horse and buggy rigs mingle with trucks and cars on the road. Lancaster County is internationally known for its skilled artisans, quality craftsmanship, and dedicated work ethic.

This is a fitting location for the work of CURBO Parking Curbs, where in a 15,000 square foot shop, thousands of parking curbs are produced weekly by a talented team, using modern tools and up-to-date, highly-durable finishing techniques.

CURBO Parking Curbs serves the entire USA with top quality concrete parking curbs built to last for the ages.

Phone: 717-442-2872 | Lancaster, PA |
www.CurboParkingCurbs.com

CurboParkingCurbs.com

Off-road traffic control

CURBO

Concrete Solutions

CURBO

Concrete Solutions

- **Parking Curbs**
- **Truck Curbs**
- **Manufacturing**
- **Delivery**
- **Installation**

How are parking curbs beneficial in parking lots?

- Safer parking and less property damage
- **Better space utilization**
- Visual aid for excellent parking systemization
- **Stormwater system friendly for water sheet flow design**
- **Concrete** Parking Curbs are a requirement on many LEED projects due to their eco-friendly design
- Superior stopping ability and reduced liability costs

PROUD

USGBC
MEMBER

Curbo's innovative packaging uses 100% reused and recycled material for packaging.

This strategy offers amazing benefits for the environment.

Thousands of trees saved!

This has diverted millions of pounds waste product out of landfills

CURBO Concrete: The environmental and profit friendly solution for better parking!

CURBO: Concrete Solution for a greener future!

Freedom Tower, NYC & Jersey City

Concrete Advantages:

- Concrete Parking Curb Pricing is usually about 1/2 of a similar product in rubber or plastic.
- No harmful, cancer causing carcinogens emitted in the manufacturing process.
- Manufactured with the most plentiful resources & raw materials on planet Earth.
- Our 5500 psi wet cast concrete mix with air entrainers & superplasticizers has been proven to outlast rubber & plastic products in longevity & weathering resistance.

Design tips

- Our 25 year warranty CURBO Yellow integral concrete color is a great marriage with MMA Markings that are popular with low maintenance requirements in heavy use applications
- 3 feet is the ideal edge to edge measurement from the edge of the parking lot
- 6-7 feet is usually required at walkways and double parallel parking
- Truck curb to edge of parking lot spacing is 6 feet if there are no obstructions in the back
- 18 foot is usually required at walkways and double parallel parking for semi truck and trailer parking
- 12—18 feet is usually required from light pole base and other similar obstructions
- Check with your local codes as these vary widely from state to state

#CCSC1

Our most popular car parking CURBO!

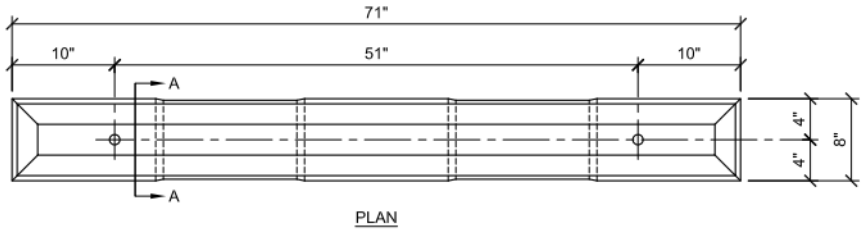

PLAN

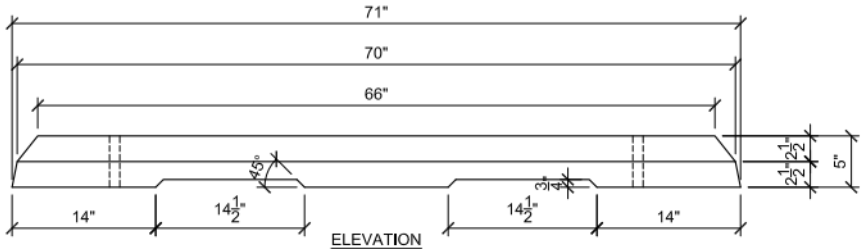

ELEVATION

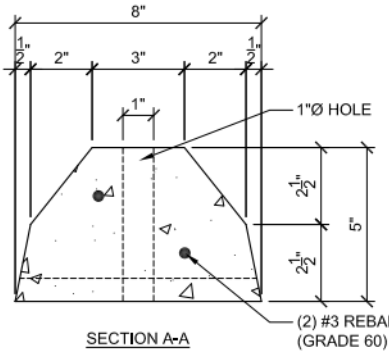

SECTION A-A

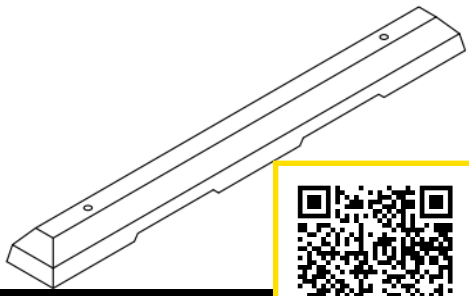

Scan for quote >>

s: 5500 PSI Air Entrained Concrete 185 lbs Car Curb Standard (Slotted)

#CCS

Our budget friendly car parking CURBO!

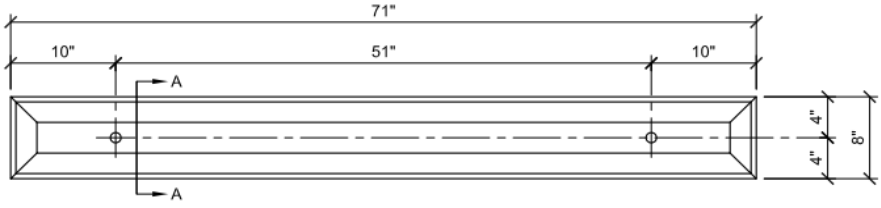

PLAN

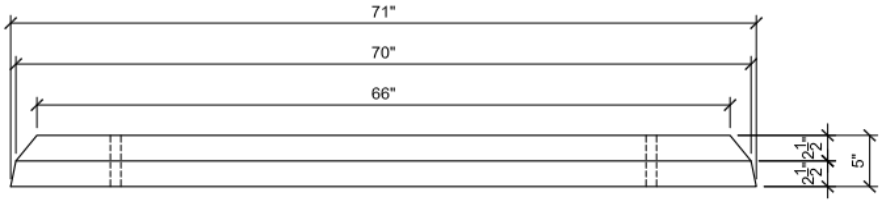

ELEVATION

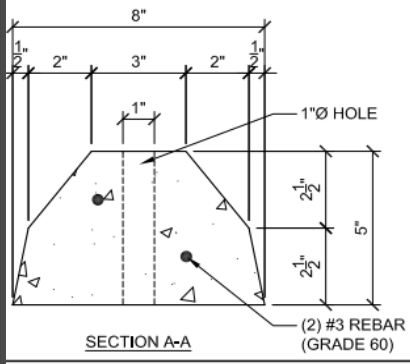

SECTION A-A

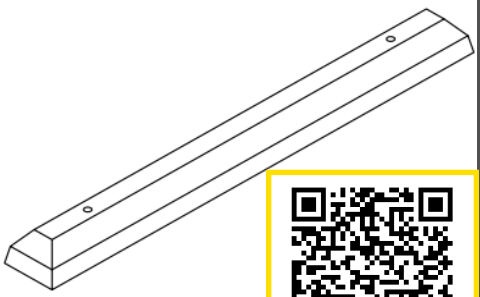

Scan for quote >>

5500 PSI Air Entrained Concrete 185 lbs Car Curb Standard

#CCSCF

D.O.T. Certified parking curb for government projects

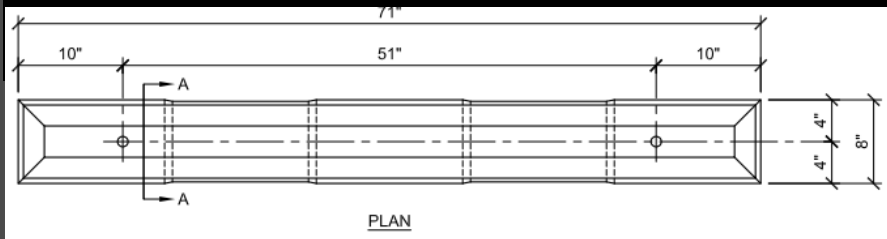

PLAN

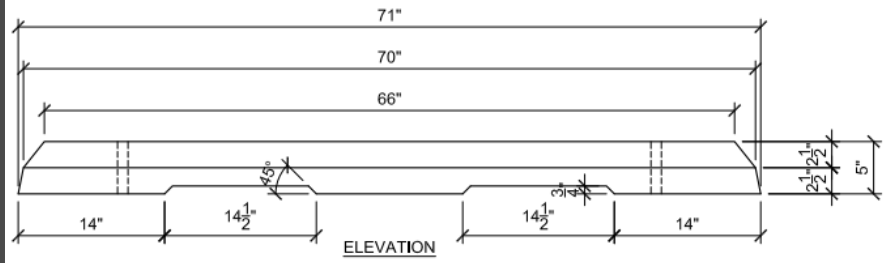

ELEVATION

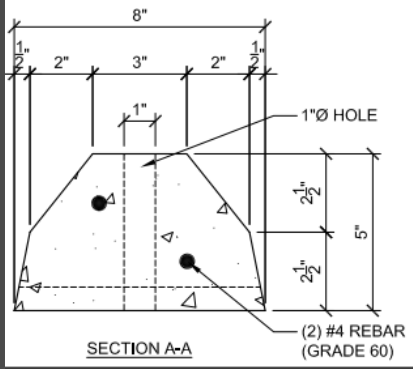

SECTION A-A

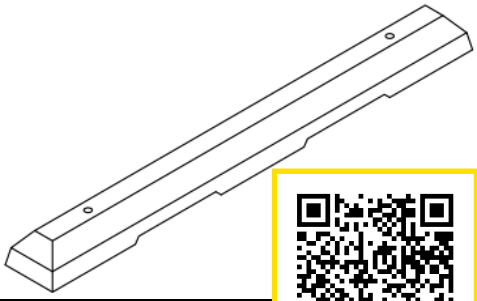

Scan for quote >>

5500 PSI Air Entrained Concrete 185 lbs Car Curb Standard (Slotted) W/ #4 Rebar

#CS7S

Our Van parking CURBO!

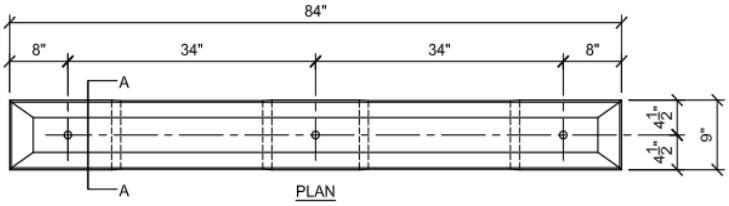

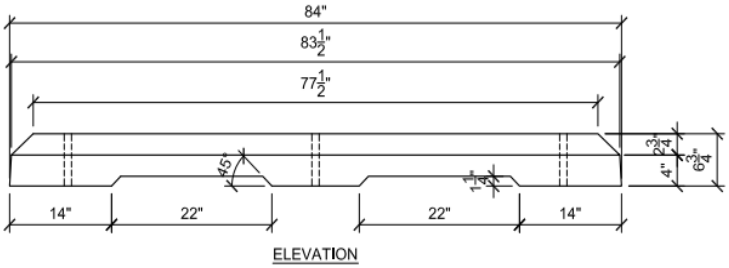

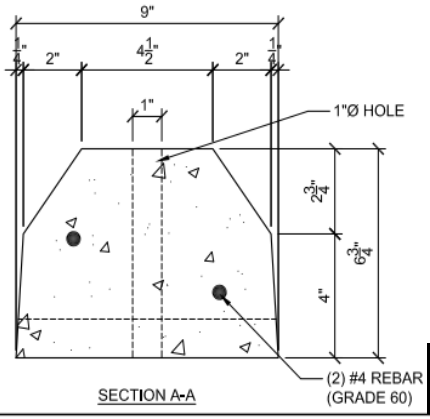

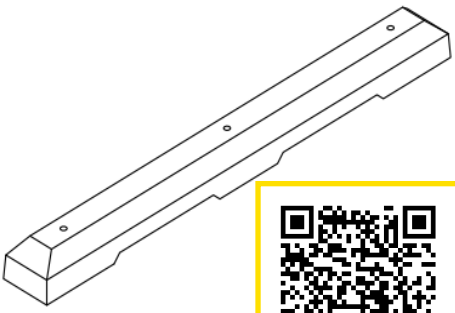

Scan for quote

NOTES: 5500 PSI Air Entrained Concrete 300 lbs Parking Curb

#TCS1

Basic truck Curbo

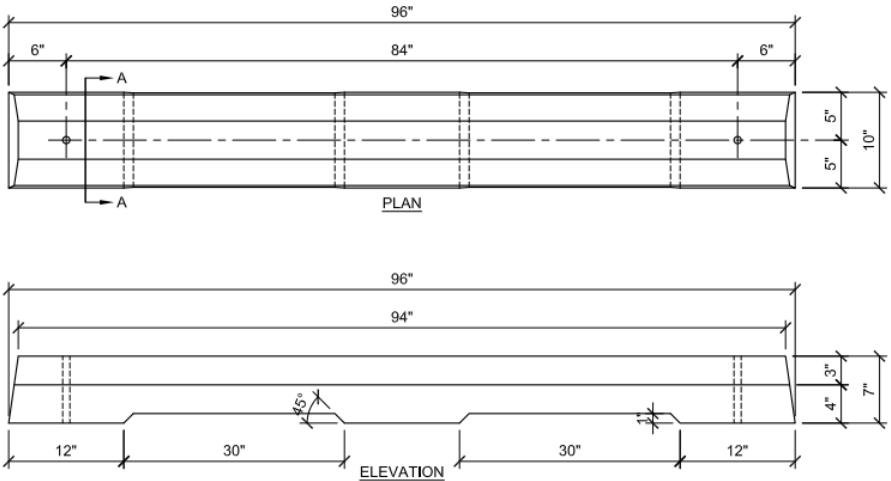

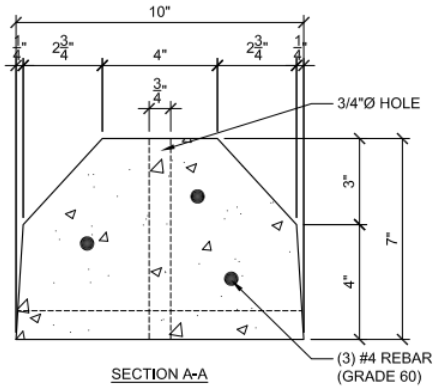

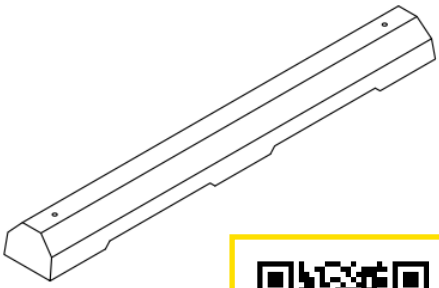

NOTES: 5500 PSI Air Entrained Concrete 465 lbs

Scan for quote

#TCH1

Basic High Truck Curbo

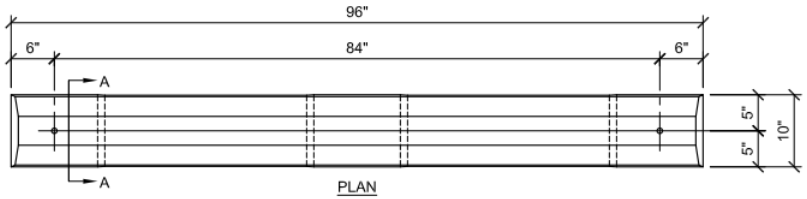

PLAN

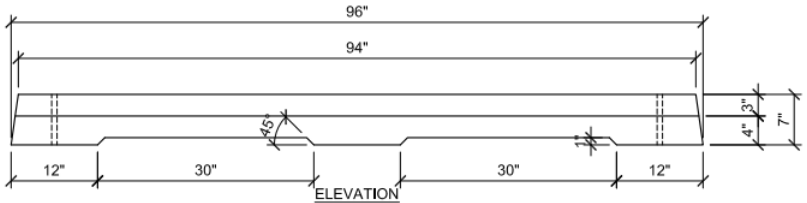

ELEVATION

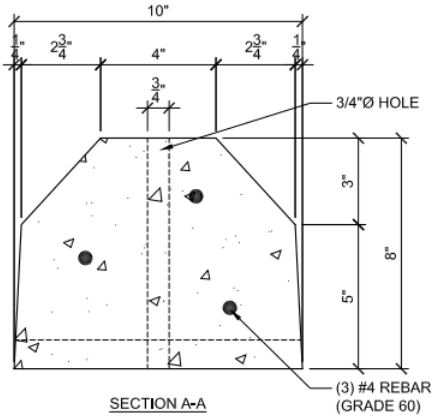

SECTION A-A

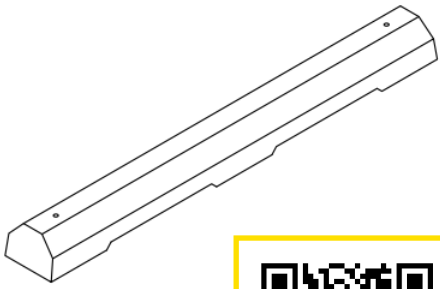

NOTES: 5500 PSI Air Entrained Concrete 545 lbs

Scan for quote

#AZCAR

Amazon approved for car and employees parking

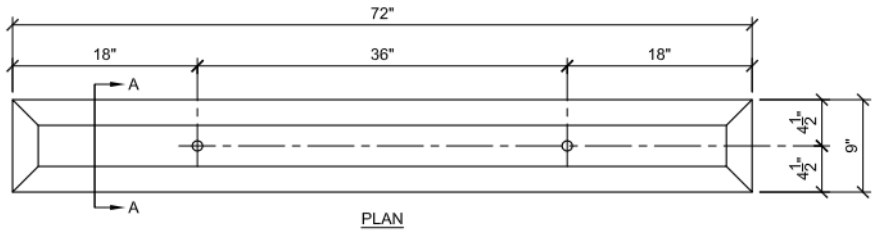

PLAN

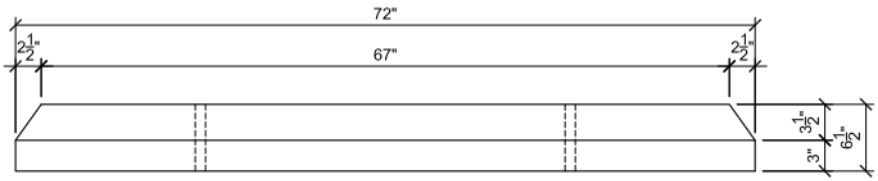

ELEVATION

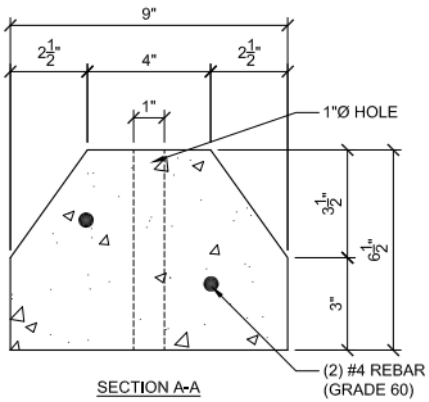

SECTION A-A

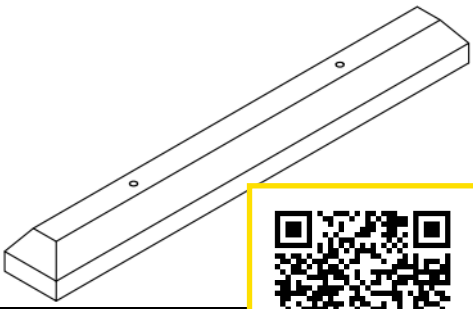

Scan for quote

ES: 5500 PSI Air Entrained Concrete 306 lbs

#AZTEC

Aztec is our most popular truck parking CURBO!

Amazon approved for truck and delivery van parking

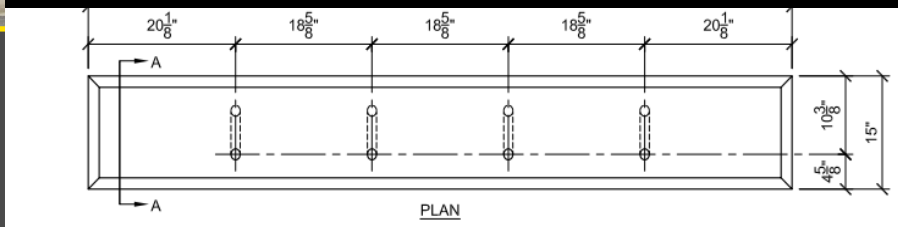

PLAN

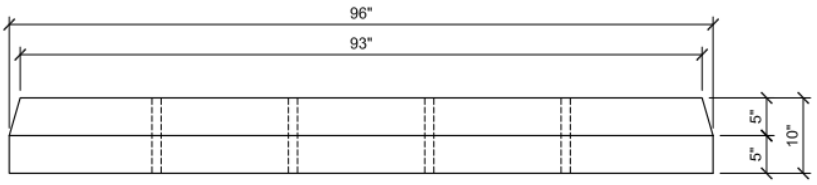

ELEVATION

The toughest CURBO!

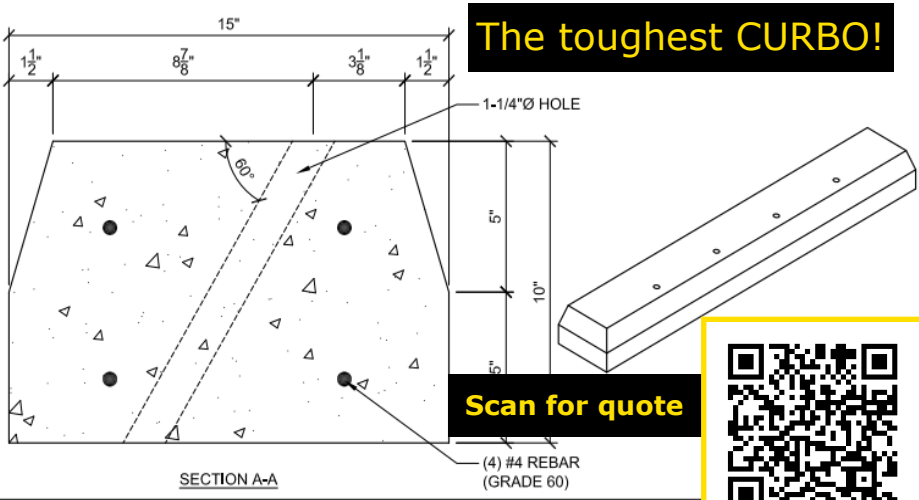

SECTION A-A

Scan for quote

NOTES: 5500 PSI Air Entrained Concrete 1,174 lbs

#TMEGA

The tallest Curbo!

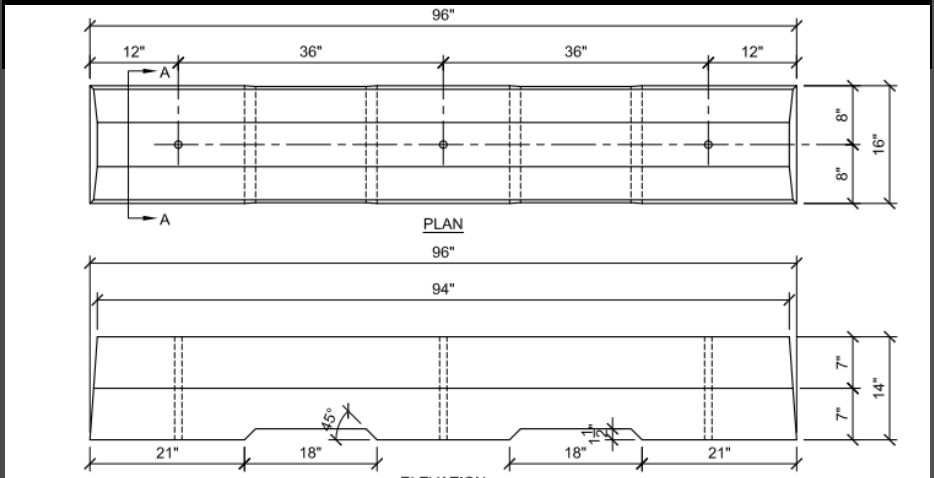

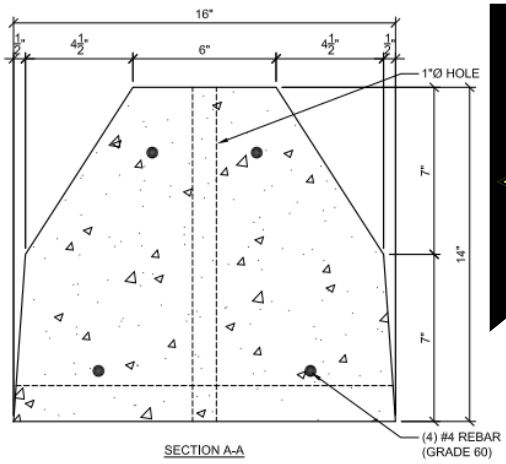

Not for jockey, trailer truck and warehouse applications!

NOTES: 5500 PSI Air Entrained Concrete 1,600 lbs

Scan for quote

#TCM1

Most popular, basic Truck Curbo!

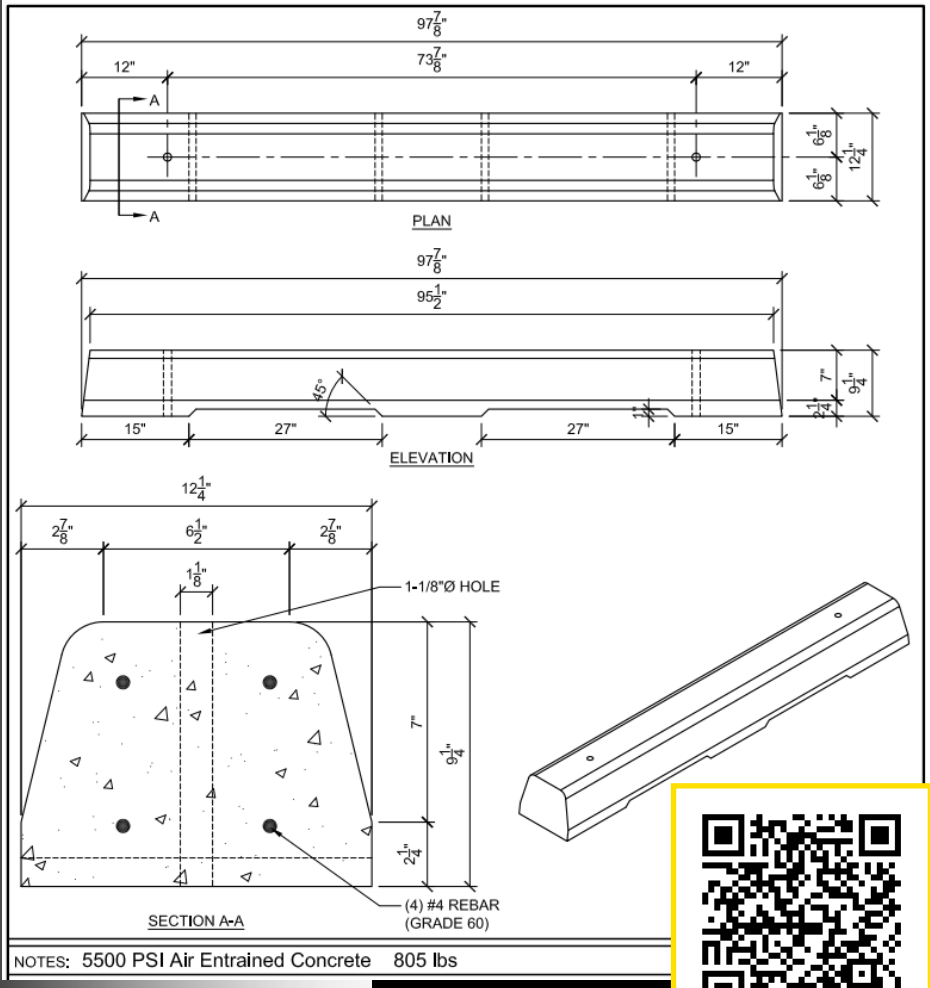

Scan for quote >>

CURBO Installation

Curbo now offers parking curb installation in all 48 states and Canada

Our customized rigs and trained crews ensure a highly successful project. On time and under budget!

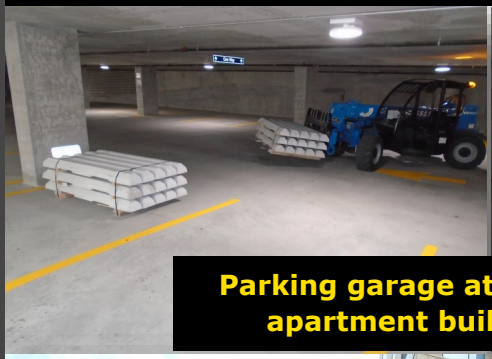

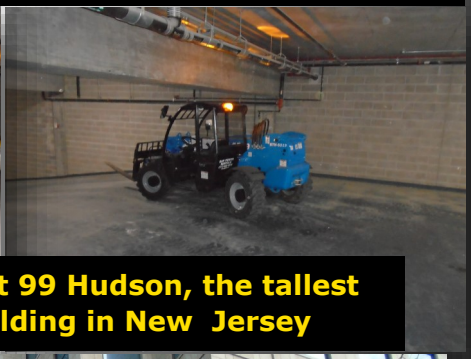

Parking garage at 99 Hudson, the tallest apartment building in New Jersey

Microsoft, Boydton VA

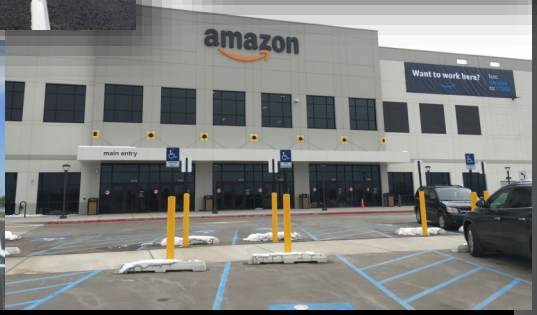

Amazon in Sparrows Point MD.
CURBO Installation specializes in warehouse projects!

Nighttime install as requested by the contractor in a shopping center

Goodyear Tire Factory

Tesla charger protector

Why CURBO Installation?

- With CURBO Installation you gain a competitive edge on those projects with a tight timeline.
- Our customized rigs and trained crews ensure a highly successful project. On time and under budget!
- CURBO Installation currently has 3 out-of-town crews available **+ 1 quick response unit for rush and emergency projects.**
- OSHA 10 and 30 hour certified + NYC Site Safety Training certified crews
- Minimize your workers comp claims. Parking curb installations are a large percentage of comp claims for line striping contractors.
- With Curbo Installation's specialized equipment you can expect your Curbos to be installed in less than half the time of most contractors.

CURBO: Concrete Solution to successful project completion!

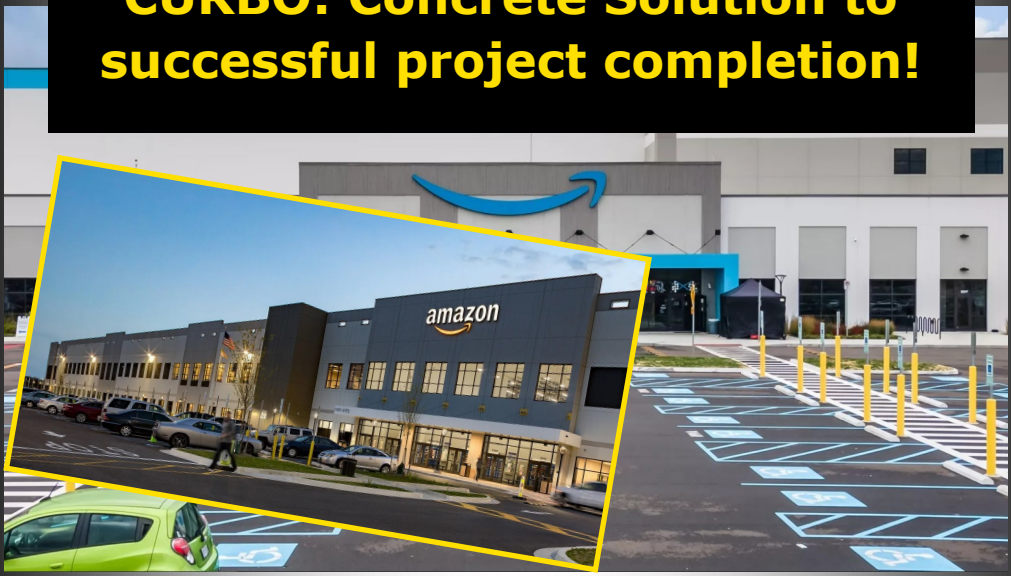

(As the nation's largest parking curb manufacturer providing delivery and install, CURBO Install's focus is on medium– extra large size projects but we will quote any size project!)

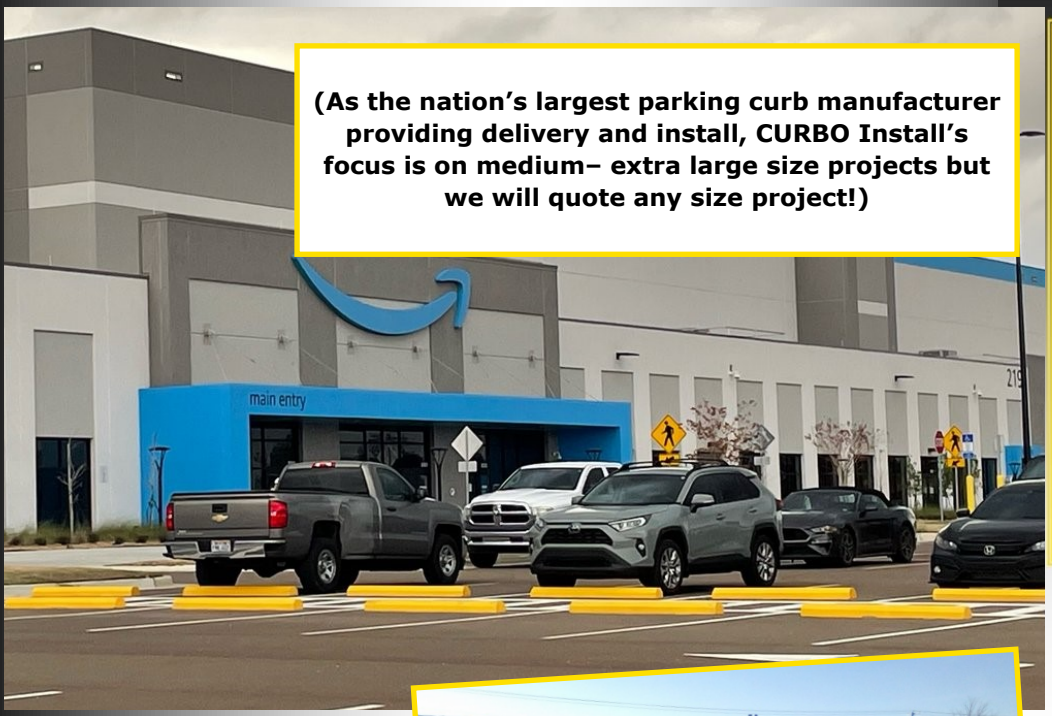

Wholesale opportunities available in select areas

CURBO

Concrete Solutions

Gold Dealer

* **45-60% retail markup**
* 5-25 mile dealer protection radius
* Complimentary listing on CurboParkingCurbs.com

Requirements

* Stock at least 1 full semi load of CURBO Parking Curbs
* 1st load can be a partial semi load with flexible payment terms if you do not currently sell concrete parking curbs

Silver Dealer

* 10% commission
* Banner and Material samples for you storefront
* Blind drop shipments direct to your customer

Requirements

* Active storefront and showroom
* Display sample parking curbs and brochures in a prominent location

Salesperson

* 5% lifetime commission for each new customer from a referral
* Banner and brochures provided by CURBO
* 5% commission for every future transaction if your customer mentions your name or location on the 1st order

Requirements

* Advertise and word-of-mouth CURBO Products
* Display and handout brochures

Curbo Parking Curbs offers a great deal for our smaller customers that prefer not to buy full loads.

Your current reality is:

- *Needing to drive to your local supplier every time you need a few curbs. (Wasting your most valuable resource, A.K.A. employees)*
- ***Paying for material before you sell or install it***
- *Cash flow dollars tied up in inventory which is a much larger waste of time, space and labor than most people realize*

Future Reality!
With Curbo's Concrete Solution to your inventory needs your future reality will look like this:

- **Get a 15% advantage over retail price if you stock at least 100 pieces of our most popular #CCSC1 parking curb**
- Curbo Parking Curbs will deliver once per month and unload at your preferred location with our moffett truck
- Our inventory will be sitting in your yard ready for when you need it!
- **You pay for the material AFTER its sold to your customer**
- Our trucker will take a count of your material sold within the last month, payment is due upon delivery of your replenished stock
- You will now have the convenience of a Curbo truck coming to your location once per month with the option of adding some of our other models for delivery to your yard or jobsite at a very competitive rate for freight!

Email: sales@curboparkingcurbs.com if you are interested.